INVERSOR SENOIDAL

MODELO AMV OND400-110-C2

Ve 110 Vcc (72 ~ 144 Vcc) / Vs 230 Vca 400W

Rack 19” 2Ux260

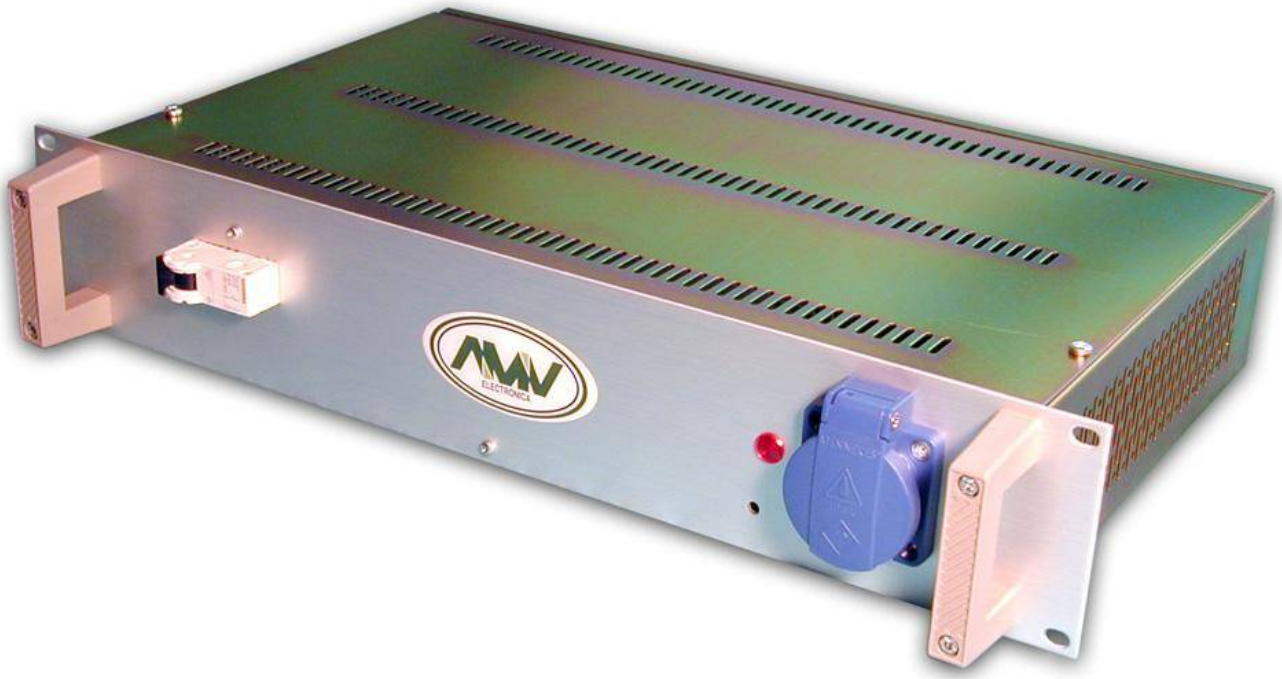

AMV ELECTRÓNICA SL C/ NAVA Nº7 BAJO 33207 GIJON ASTURIAS
TFNO 985319171 FAX: 985346795 EMAIL amv@amvelectronica.com
www.amvelectronica.com

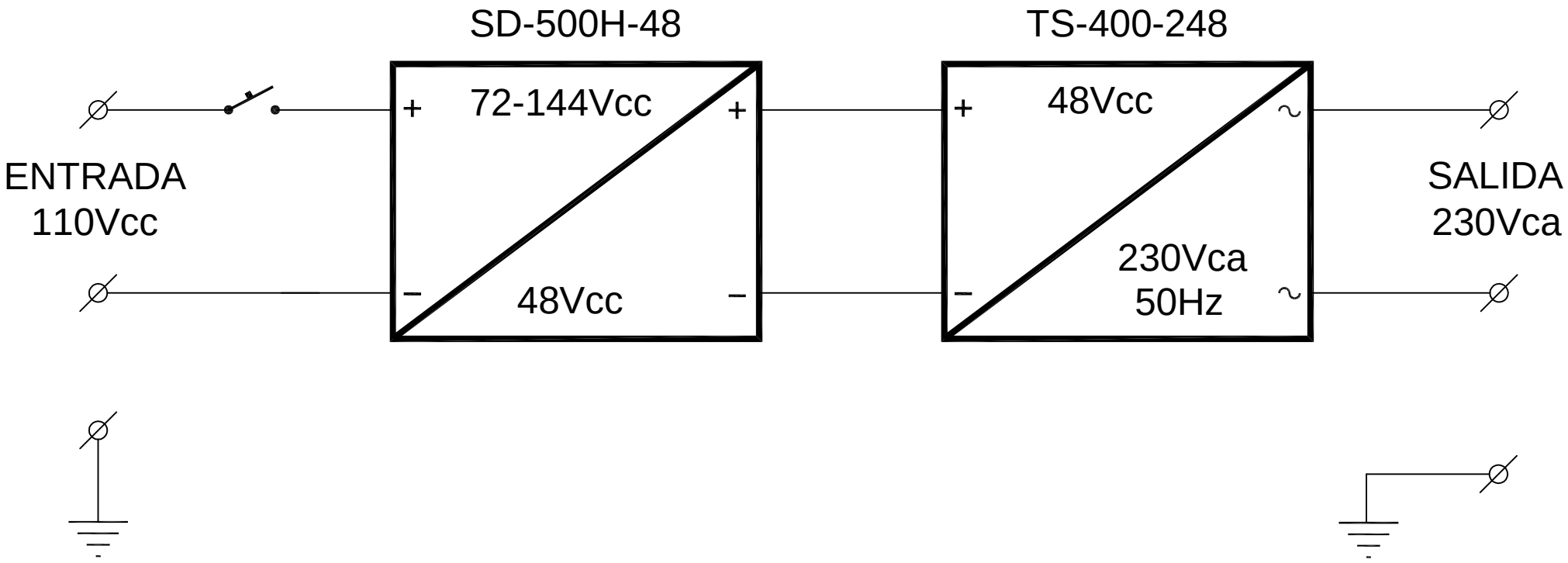

ESCALA:	MATERIAL:								ACABADO:	
	FECHA		FIRMA							
APROBO	22/7/2016		IVÁN						DIAGRAMA EN BLOQUES DE OND400-110-C2	
DIBUJO										
AUTORIZO										
FECHA										
EDICION	1								CODIGO: 30OND400110C2	NUMERO: 300199

BORNES SITUADOS EN EL TRASERO DE LA CAJA

AMV OND200/400-XX-CX

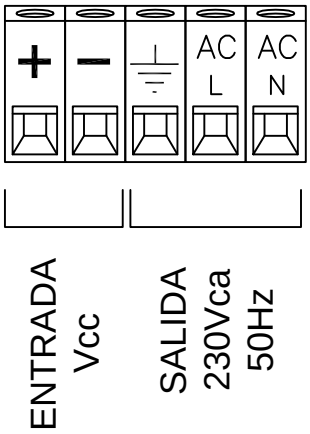

AMV OND700-XX-CX

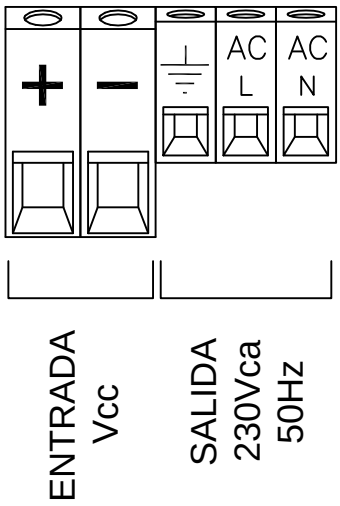

ESCALA:	MATERIAL:							ACABADO:	
	FECHA		FIRMA						
APROBO	2/2/16		IVÁN					CONEXION ENTRADA−SALIDA	
DIBUJO								EQUIPO AMV OND200/400/700−XX−CX	
AUTORIZO									
FECHA		3/3/16	25/7/16						
EDICION	1	2	3					CODIGO: 50AMVOND70048C2	NUMERO: 500140

500W Single Output DC-DC Converter

SD-500 series

■ Features :

- DC input active surge current limiting
- Wide 4:1~2:1 DC input range (24V: 19~72VDC, 96V:72~144VDC)
- Protections: Short circuit / Overload / Over voltage / Over temperature / Input polarity(by fuse)
- 2000VAC I/O Isolation
- Forced air cooling by built-in DC fan with fan speed control function
- Output OK Signal
- Built-in remote ON-OFF control
- Built-in remote sense function

CB CE

SPECIFICATION

MODEL		SD-500L-12	SD-500L-24	SD-500L-48	SD-500H-12	SD-500H-24	SD-500H-48
OUTPUT	DC VOLTAGE	12V	24V	48V	12V	24V	48V
	RATED CURRENT	40A	21A	10.5A	40A	21A	10.5A
	CURRENT RANGE	0 ~ 40A	0 ~ 21A	0 ~ 10.5A	0 ~ 40A	0 ~ 21A	0 ~ 10.5A
	RATED POWER	480W	504W	504W	480W	504W	504W
	RIPPLE & NOISE (max.) Note.2	150mVp-p	150mVp-p	150mVp-p	150mVp-p	150mVp-p	150mVp-p
	VOLTAGE ADJ. RANGE	11 ~ 15V	23 ~ 30V	46 ~ 60V	11 ~ 15V	23 ~ 30V	46 ~ 60V
	VOLTAGE TOLERANCE Note.3	±1.0%	±1.0%	±1.0%	±1.0%	±1.0%	±1.0%
	LINE REGULATION	±0.5%	±0.5%	±0.5%	±0.5%	±0.5%	±0.5%
	LOAD REGULATION	±0.5%	±0.5%	±0.5%	±0.5%	±0.5%	±0.5%
	SETUP, RISE TIME	500ms, 50ms at full load					
INPUT	VOLTAGE RANGE Note.5	19 ~ 72VDC			72 ~ 144VDC		
	EFFICIENCY (Typ.)	86%	88%	89%	87%	89%	90%
	DC CURRENT (Typ.)	24.2A/19VDC 24.8A/24VDC 12A/48VDC			8A/72VDC 6A/96VDC		
	CURRENT (AT NO LOAD)	Max. 0.2A/48VDC			Max. 0.1A/96VDC		
	INRUSH CURRENT (Typ.)	60A/48VDC			60A/96VDC		
PROTECTION	OVERLOAD	105 ~ 125% rated output power					
		Protection type : Constant current limiting, shut down o/p voltage after about 5 sec., re-power on to recover					
	OVER VOLTAGE	16 ~ 19V	30.8 ~ 35.2V	62 ~ 68V	16 ~ 19V	30.8 ~ 35.2V	62 ~ 68V
		Protection type : Shut down o/p voltage, re-power on to recover					
	OVER TEMPERATURE	Shut down o/p voltage, recovers automatically after temperature goes down					
FUNCTION	REMOTE ON/OFF CONTROL	Please refer to function manual					
	OUTPUT OK SIGNAL	Open collector signal low when PSU turns on, max. sink current :10mA					
ENVIRONMENT	WORKING TEMP.	-20 ~ +60℃ (Refer to "Derating Curve")					
	WORKING HUMIDITY	20 ~ 90% RH non-condensing					
	STORAGE TEMP., HUMIDITY	-40 ~ +85℃, 10 ~ 95% RH					
	TEMP. COEFFICIENT	±0.02%/℃ (0 ~ 50℃)					
	VIBRATION	10 ~ 500Hz, 2G 10min./1cycle, 60min. each along X, Y, Z axes					
SAFETY & EMC (Note 4)	SAFETY STANDARDS	IEC60950-1 CB approved by TUV					
	WITHSTAND VOLTAGE	I/P-O/P:2KVAC I/P-FG:2KVAC O/P-FG:0.5KVAC					
	ISOLATION RESISTANCE	I/P-O/P, I/P-FG, O/P-FG:100M Ohms / 500VDC / 25℃/ 70% RH					
	EMC EMISSION	Compliance to EN55022 (CISPR22) Class B					
	EMC IMMUNITY	Compliance to EN61000-4-2,3,4,6,8, light industry level, criteria A					
OTHERS	MTBF	196.3K hrs min. MIL-HDBK-217F (25℃)					
	DIMENSION	215*115*50mm (L*W*H)					
	PACKING	1.15Kg; 12pcs/14.8Kg/0.92CUFT					

NOTE

1. All parameters NOT specially mentioned are measured at 48, 96VDC input, rated load and 25℃ of ambient temperature.
2. Ripple & noise are measured at 20MHz of bandwidth by using a 12" twisted pair-wire terminated with a 0.1uf & 47uf parallel capacitor.
3. Tolerance : includes set up tolerance, line regulation and load regulation.
4. The power supply is considered a component which will be installed into a final equipment. The final equipment must be re-confirmed that it still meets EMC directives. For guidance on how to perform these EMC tests, please refer to “EMI testing of component power supplies.”
5. Derating may be needed under low input voltages. Please check the derating curve for more details.

AMV ELECTRÓNICA SL - C/ NAVA Nº7 BAJO - 33207 - GIJON - ASTURIAS
TFN 985 31 91 71 - FAX 985 34 67 95 - amv@amvelectronica.com
www.amvelectronica.com

■ Mechanical Specification

Case No. 912A Unit:mm

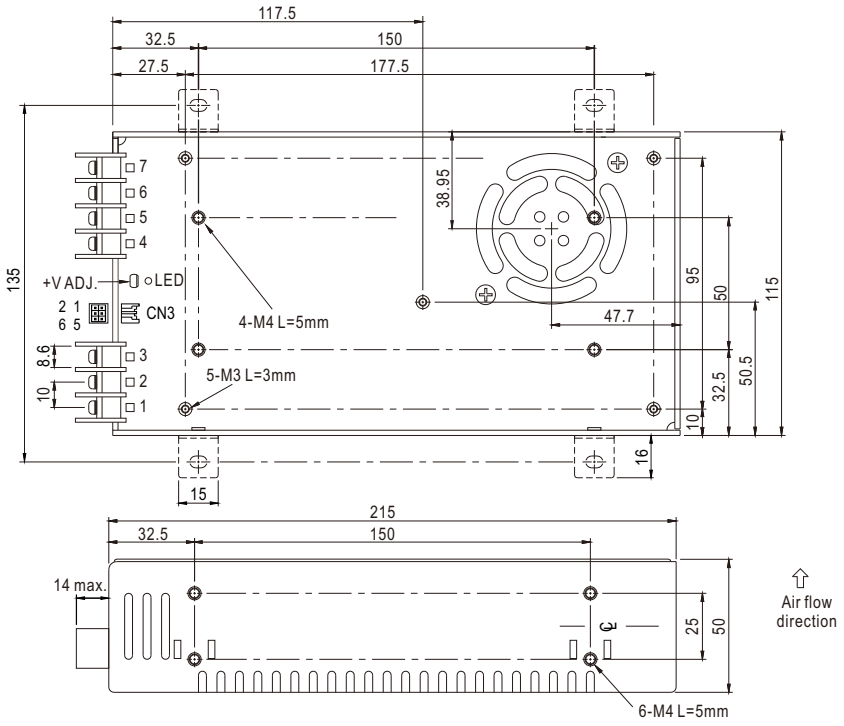

DC Input Terminal Pin No. Assignment

Pin No.	Assignment	Pin No.	Assignment
1	DC INPUT V+	4,5	-V
2	DC INPUT V-	6,7	+V
3	FG ⏚		

Control Pin No. Assignment (CN3) : HRS DF11-6DP-2DS or equivalent

Pin No.	Assignment	Pin No.	Assignment	Mating Housing	Terminal
1	+S	4	GND	HRS DF11-6DS or equivalent	JST SPHD-002T-P0.5 or equivalent
2	-S	5	RC		
3	OUTPUT OK	6	RCG		

■ Block Diagram

BOOST fosc : 65KHz
PWM fosc : 110KHz

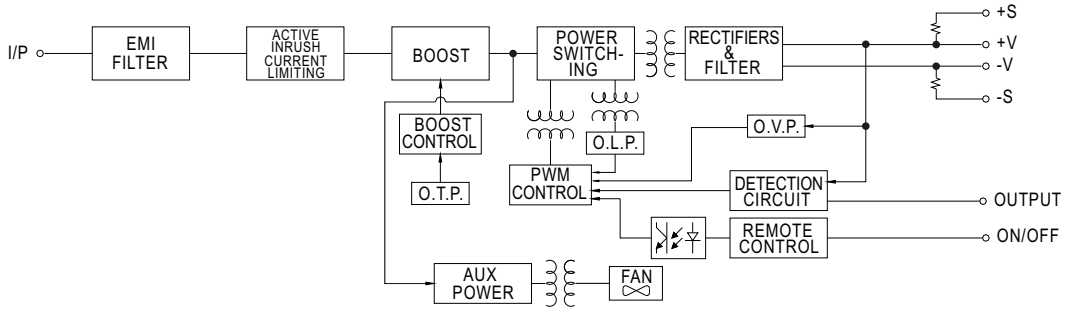

■ Derating Curve

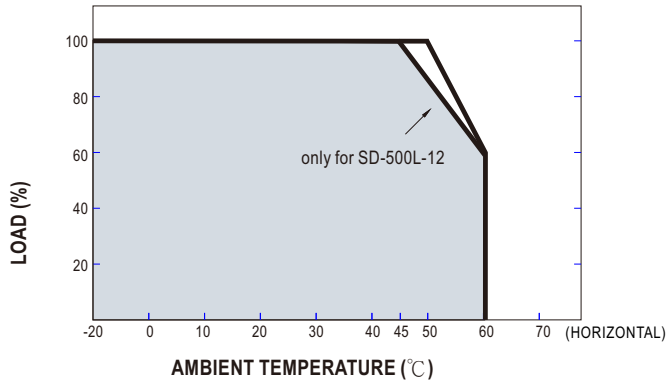

■ Static Characteristics

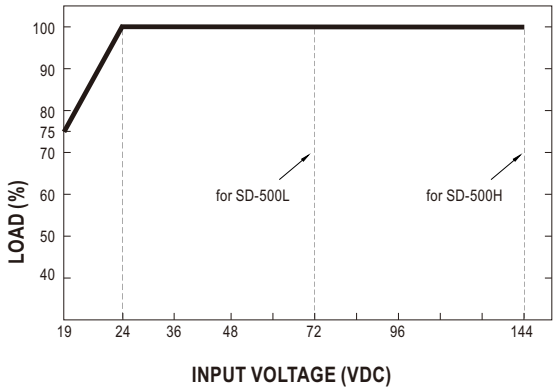

■ Function Description of CN3

Pin No.	Function	Description
1	+S	Positive sensing. The +S signal should be connected to the positive terminal of the load. The +S and -S leads should be twisted in pair to minimize noise pick-up effect. The maximum line drop compensation is 0.5V.
2	-S	Negative sensing. The -S signal should be connected to the negative terminal of the load. The -S and +S leads should be twisted in pair to minimize noise pick-up effect. The maximum line drop compensation is 0.5V.
3	O/P OK	Open collector signal, reference to pin4(GND). Low when PSU turns on. The maximum sink current is 10mA and the maximum external voltage is 13V.
4	GND	These pins connect to the negative terminal (-V).
5	RC	Remote ON/OFF
6	RCG	Remote ON/OFF ground

■ Function Manual

1.Remote ON/OFF

(1)Remote ON/OFF control becomes available by applying voltage in CN3

(2)Table 1.1 shows the specification of Remote ON/OFF function

(3)Fig.1.2 shows the example to connect Remote ON/OFF control function

Table 1.1 Specification of Remote ON/OFF

Connection Method	Fig. 1.2(A)	Fig. 1.2(B)
Output on	SW Open	V=0~0.8Vdc
Output off	SW Close	V=4~10Vdc

Fig.1.2 Examples of connecting remote ON/OFF

(A)Using external voltage source

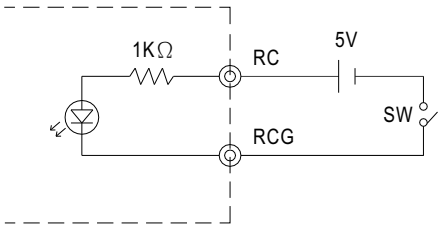

(B)Using external voltage source

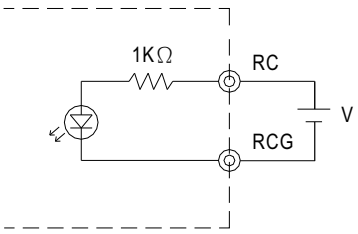

2.Output OK signal

"Output OK" is an open collector signal.
It indicates the output status of the PSU. It can operate in two ways : One is sinking current from external signal ; the other is sending out a voltage signal.

2-1 Sink current :

The maximum sink current is 10mA and the maximum external voltage is 13V.

2-2 Voltage signal :

Between O/P OK(pin3) and GND(pin4)	Output Status
0 ~ 0.5V	ON
12 ~ 13V	OFF

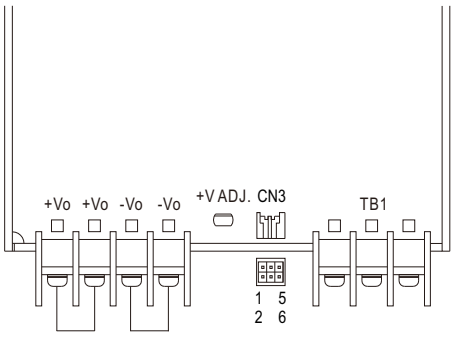

1	CN3	5
+S	O/P OK	RC
-S	GND	RCG
2		6

3.Remote Sense

The remote sensing compensates voltage drop on the load wiring up to 0.5V.

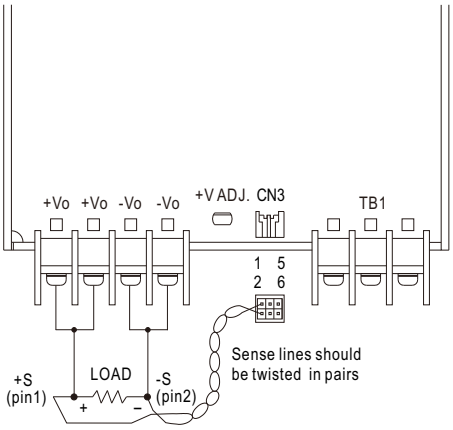

1	CN3	5
+S	O/P OK	RC
-S	GND	RCG
2		6

AMV ELECTRÓNICA SL - C/ NAVA Nº7 BAJO - 33207 - GIJON - ASTURIAS
TFN 985 31 91 71 - FAX 985 34 67 95 - amv@amvelectronica.com
www.amvelectronica.com

400W True Sine Wave DC-AC Power Inverter **TS-400 series**

■ Features :

- True sine wave output (THD<3%)
- High surge power up to 800W
- High efficiency up to 88.5%
- Thermostatically controlled cooling fan
- Built-in remote ON-OFF control
- Front panel indicator for operation status
- Power ON-OFF switch
- Protections: Bat. low alarm / Bat. low shutdown / Over voltage / Over temp. / Output short / Input reverse polarity / Overload
- Application : Home appliance, power tools, office and portable equipment, vehicle and yacht ...etc.

SPECIFICATION

MODEL		TS-400-112□	TS-400-124□	TS-400-148□	TS-400-212□	TS-400-224□	TS-400-248□
OUTPUT	RATED POWER	400W					
	MAXIMUM OUTPUT POWER	460W for 180 sec. / 600W for 10 sec. / surge power 800W for 30 cycles(typ.)					
	AC VOLTAGE	Factory setting set at 110VAC			Factory setting set at 230VAC		
		100 / 110 / 115 / 120VAC selectable by setting button S.W			200 / 220 / 230 / 240VAC selectable by setting button S.W		
	FREQUENCY	60±0.1Hz 50/60Hz selectable by setting button			50±0.1Hz 50/60Hz selectable by setting button		
	WAVEFORM	True sine wave (THD<3%) at rated input voltage					
	AC REGULATION (Typ.)	±3.0% at rated input voltage					
	FRONT PANEL INDICATOR	Operation status ; Green : normal, Orange(flashing) : remote control OFF, Red : abnormal					
INPUT	BAT. VOLTAGE	12V	24V	48V	12V	24V	48V
	VOLTAGE RANGE (Typ.)	10.5 ~ 15VDC	21 ~ 30VDC	42 ~ 60VDC	10.5 ~ 15VDC	21 ~ 30VDC	42 ~ 60VDC
	DC CURRENT (Typ.)	40A	20A	10A	40A	20A	10A
	NO LOAD CURRENT DRAW (Typ.)	1.25A	0.63A	0.32A	1.25A	0.63A	0.32A
	OFF MODE CURRENT DRAW	≦1mA					
	EFFICIENCY (Typ.) Note.1	84.5%	86%	87%	86%	87.5%	88.5%
	BATTERY TYPES	Open & sealed Lead Acid					
BATTERY INPUT PROTECTION	FUSE	40A*2	40A*1	20A*1	40A*2	40A*1	20A*1
	BAT. LOW ALARM	11.3±4%	22.5±4%	45±4%	11.3±4%	22.5±4%	45±4%
	BAT. LOW SHUTDOWN	10.5±4%	21±4%	42±4%	10.5±4%	21±4%	42±4%
	BAT. POLARITY	By internal fuse open					
OUTPUT PROTECTION	OVER TEMPERATURE	85℃±5℃	75℃±5℃	70℃±5℃	85℃±5℃	75℃±5℃	70℃±5℃
		Protection type : Shut down o/p voltage, re-power on to recover; by internal RTH1 detect power transistor					
	OUTPUT SHORT	Protection type : Shut down o/p voltage, re-power on to recover					
	OVER LOAD (Typ.)	105 ~ 115% load for 180 sec., 115% ~ 150% load for 10 sec.					
		Protection type : Shut down o/p voltage, re-power on to recover					
	GFCI PROCTECTION	Optional (Only type F)			None		
FUNCTION	REMOTE CONTROL	Open : Normal work ; Short : Remote off					
ENVIRONMENT	WORKING TEMP.	-10 ~ +40℃ @ 100% load ; +60℃ @ 50% load					
	WORKING HUMIDITY	20% ~ 90% RH non-condensing					
	STORAGE TEMP., HUMIDITY	-30 ~ +70℃ / -22 ~ +158°F, 10 ~ 95% RH					
	VIBRATION	10 ~ 500Hz, 3G 10min./1cycle, 60min. each along X, Y, Z axes					
SAFETY & EMC	SAFETY STANDARDS	Design refer to UL458		None			
	LVD	None			EN60950-1		
	WITHSTAND VOLTAGE	Bat. I/P - AC O/P:3.0KVAC AC O/P - FG:1.5KVAC					
	ISOLATION RESISTANCE	Bat. I/P-AC O/P, AC O/P-FG:100M Ohms / 500VDC / 25℃/ 70% RH					
	EMI CONDUCTION&RADIATION	Compliance to FCC class A			Compliance to EN55022 class A, 72/ 245/ CEE, 95/ 54/ CE, E-Mark		
	EMS IMMUNITY	None			Compliance to EN61000-4-2,3,8 ENV50204		
OTHERS	MTBF	104.7K hrs min. MIL-HDBK-217F (25°C)					
	DIMENSION	205*158*67mm (L*W*H)					
	PACKING	1.73Kg; 6pcs/11.4Kg/1.55CUFT					
NOTE	1.Efficiency is tested by 300W, linear load at 12V/24V/48V input voltage. 2.All parameters not specified above are measured at rated load, 25℃ of ambient temperature.						

AMV ELECTRÓNICA SL - C/ NAVA Nº7 BAJO - 33207 - GIJON - ASTURIAS
TFN 985 31 91 71 - FAX 985 34 67 95 - amv@amvelectronica.com
www.amvelectronica.com

400W True Sine Wave DC-AC Power Inverter — TS-400 series

TS – 400 – 112 A

- TS: True sine wave inverter
- 400: O/P Wattage:400W
- 112: Bat. Voltage: 12:12VDC, 24:24VDC, 48:48VDC; Output: 1:110VAC, 2:230VAC
- A: A :TYPE A OUTLET, B :TYPE B OUTLET, C :TYPE C OUTLET, D :TYPE D OUTLET, E :TYPE E OUTLET, F :TYPE F OUTLET

■ AC Output Receptacles (optional)

Receptacle type	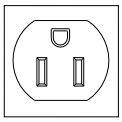	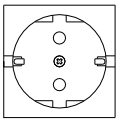	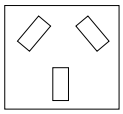	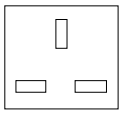	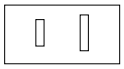	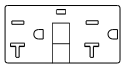
	TYPE-A	TYPE-B	TYPE-C	TYPE-D	TYPE-E	TYPE-F
Country	USA	EUROPE	AUSTRALIA	U.K	JAPAN	GFCI
Certificate	FC	E13 CE	E13 CE	E13 CE	FC	FC

■ Mechanical Specification

Unit:mm

R.C Connector : JST B-XH or equivalent

Open	Normal work
Short	Remote off

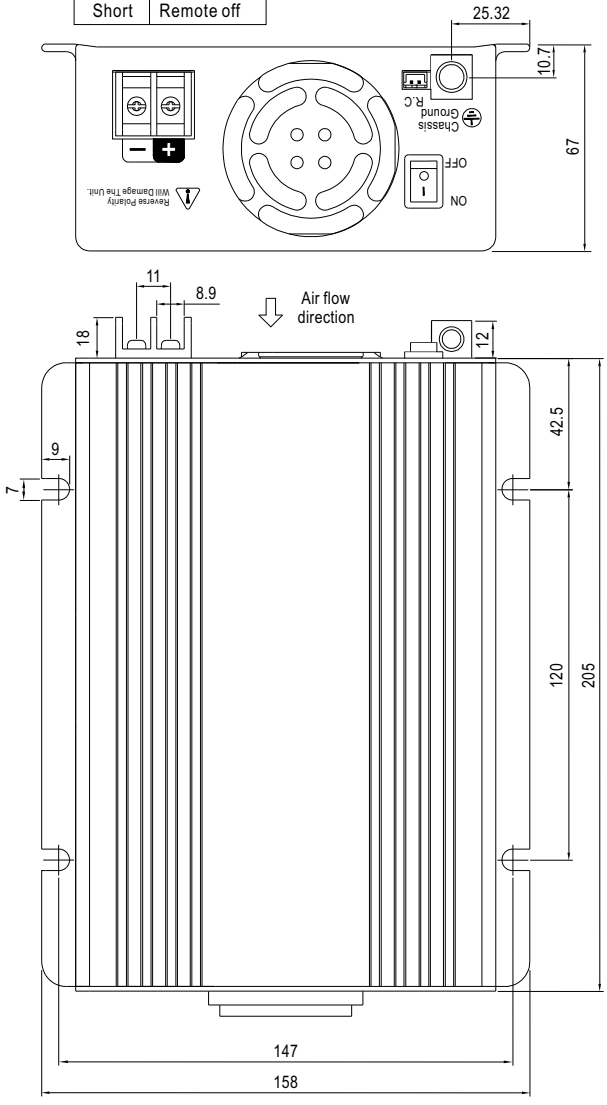

■ Derating Curve

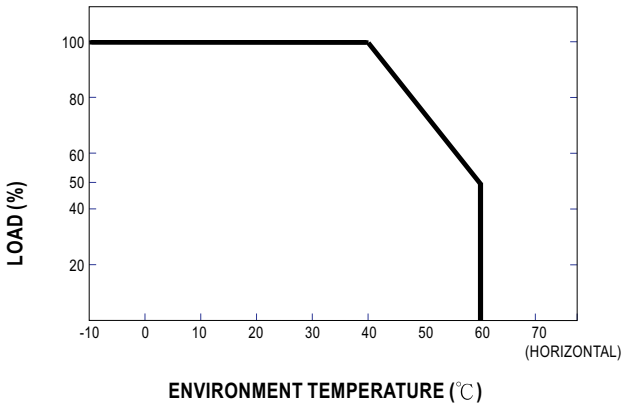

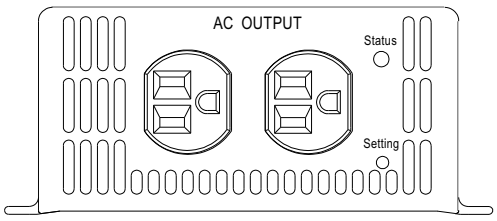

Type-A

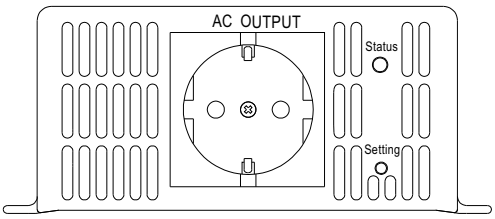

Type-B

C/ NAVA Nº 7 BAJO
33207 GIJON (ASTURIAS)
TFNO 985 319171 FAX 985 346795
Email: amv@amvelectronica.com

www.amvelectronica.com

GARANTIA

TODOS LOS EQUIPOS FABRICADOS POR **AMV ELECTRÓNICA** SALEN DE NUESTROS TALLERES AJUSTADOS, NUMERADOS Y CON DOCUMENTACIÓN TÉCNICA, **SIENDO LA GARANTIA TOTAL DE 2 AÑOS.**

LA GARANTÍA CUBRE LAS SITUACIONES DE DAÑO INTRÍNSECO, Y NO LAS PROVOCADAS POR CAUSAS EXTERNAS O LA MANIPULACIÓN POR PARTE DEL USUARIO.

LA GARANTÍA SE ENTIENDE EN NUESTROS TALLERES, SIENDO POR CUENTA DEL USUARIO LOS COSTES DEL TRANSPORTE.

AMV ELECTRONICA

TELEFONOS & E-MAIL DE CONTACTO

DEPARTAMENTO	RESPONSABLE	Teléfono	e-MAIL
Comercial y Ventas	Gracia Nomparte	985319171 Ext. 10	gracia@amvelectronica.com
Ingeniería	Víctor Viña	985319171 Ext. 18	
Producción	Jenaro Blanco		compras@amvelectronica.com
Servicio de Asistencia Técnica	Alejandro Arce	985319171 Ext. 17	sat@amvelectronica.com
Administración	Laura Granda	985319171 Ext. 12	administracion@amvelectronica.com